Item	Internal Part Name	Rev	Quantity
1	Rotary Tool Top	A	1
2	Rotary Tool PCB	G	1
3	M5 x 22mm Flat Head Screw		3
4	Countersunk Ring Magnet	A	3
5	M5 Flange Locknut		3
6	M3 x 12mm Screw		5
7	M3 Locknut		5

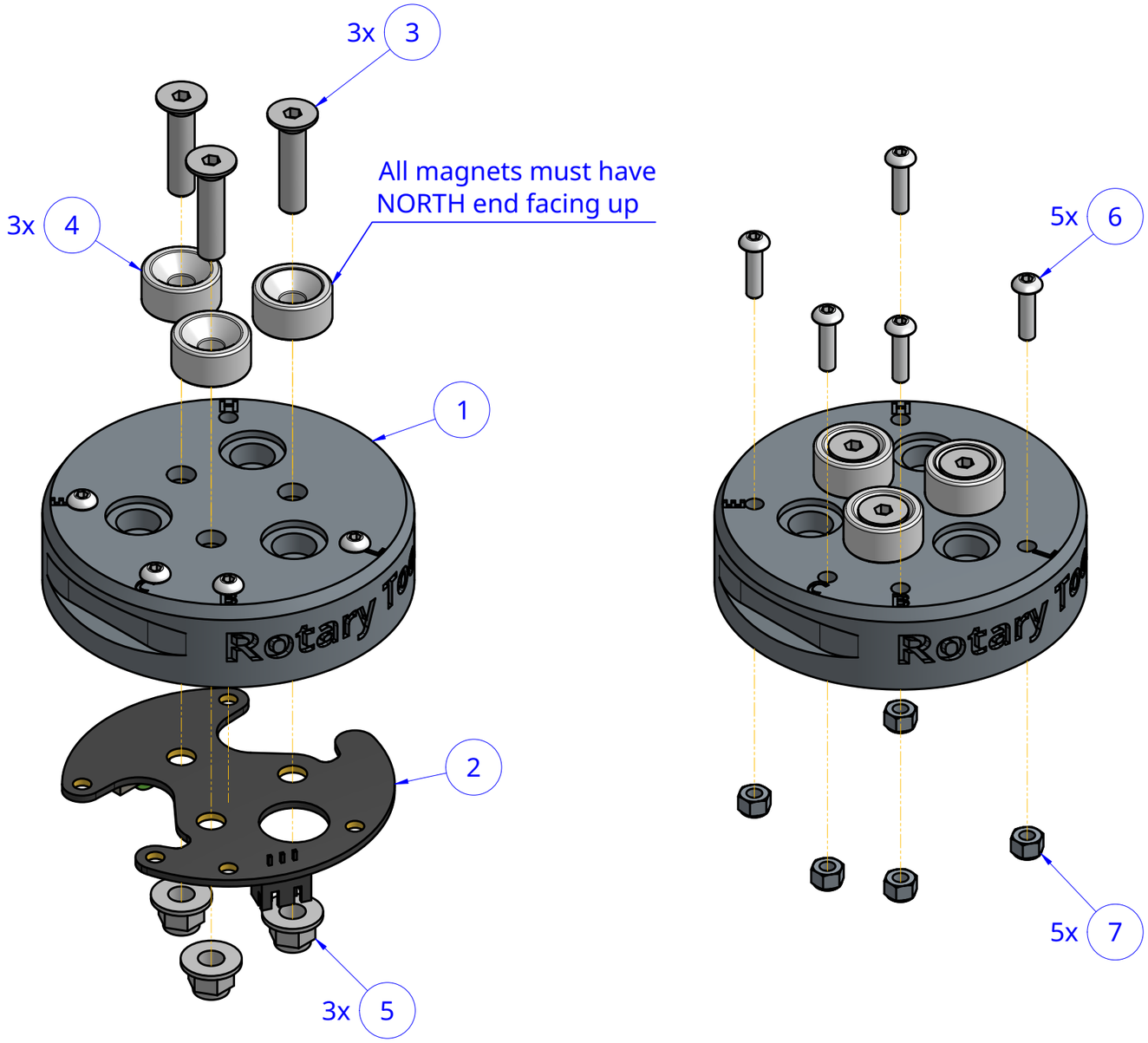

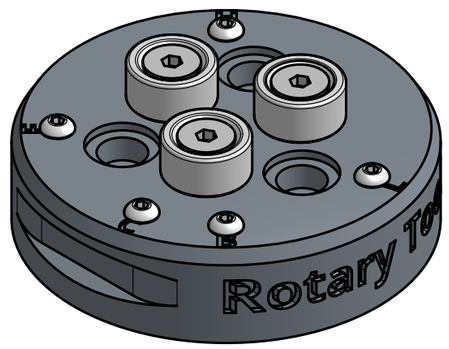

Pre-Assembled Rotary Tool Top Rev B

NOTES:

DRAWN BY: Rory, 2021-12-17
COMPANY: FarmBot Inc
LICENSE: CC0 Public Domain Dedication

PROJECTION: First Angle
UNITS: Millimeters
SCALE: 1:1

SHEET: 1 of 5
SIZE: A3

Item	Internal Part Name	Rev	Quantity
1	Rotary Tool Bottom	A	1
2	M2.5 x 6mm Screw (2mm Hex Drive)		2
3	Rotary Tool Trimmer Mount	C	1
4	M5 Flange Locknut		1
5	24V Rotary Tool Motor (500TB-12560)	A	1
6	M4 x 4mm Stainless Steel Setscrew w/ 2mm Hex Drive		1
7	Rotary Tool M5 Shaft Adapter	C	1

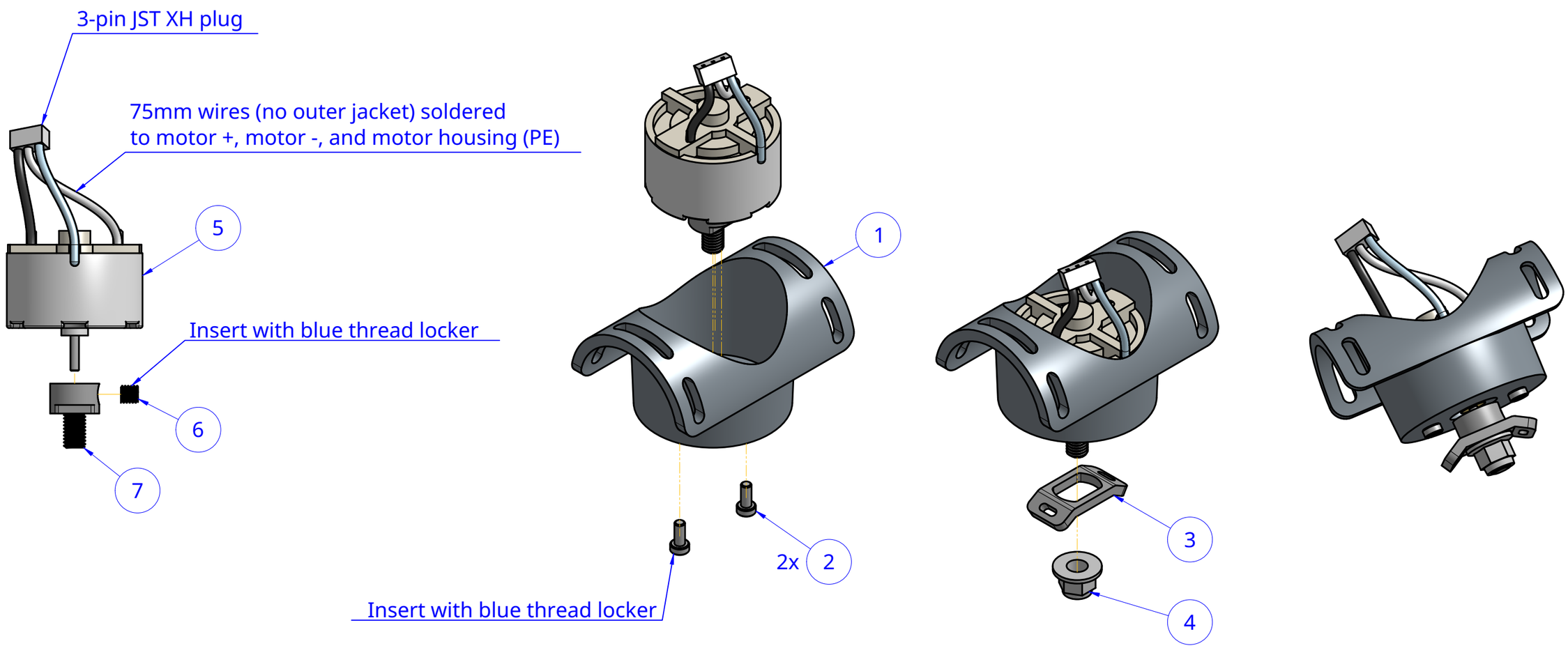

Pre-Assembled Rotary Tool Bottom Rev B

NOTES:

DRAWN BY: Rory, 2021-12-17
COMPANY: FarmBot Inc
LICENSE: CC0 Public Domain Dedication

PROJECTION: First Angle
UNITS: Millimeters
SCALE: 1:1

SHEET: 2 of 5
SIZE: A3

Item	Internal Part Name	Rev	Quantity
1	Pre-Assembled Rotary Tool Top	B	1
2	Pre-Assembled Rotary Tool Bottom	B	1
3	M3 x 12mm Screw		2

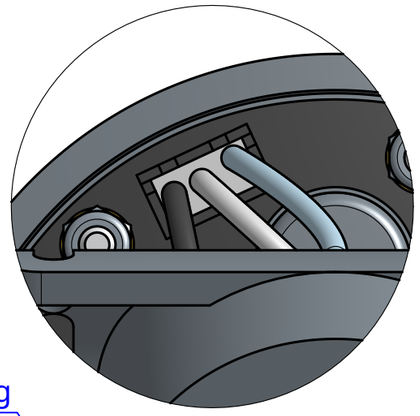

A

Pre-Assembled Rotary Tool Rev B

NOTES:

DRAWN BY: Rory, 2021-12-17
COMPANY: FarmBot Inc
LICENSE: CC0 Public Domain Dedication

PROJECTION: First Angle
UNITS: Millimeters
SCALE: 1:1

SHEET: 3 of 5
SIZE: A3

Item	Internal Part Name	Rev	Quantity
1	Rotary Tool Chuck		1
2	Rotary Tool Chuck Adapter	B	1
3	Rotary Tool Shaft Extension	B	1
4	Rotary Tool Trimmer		30

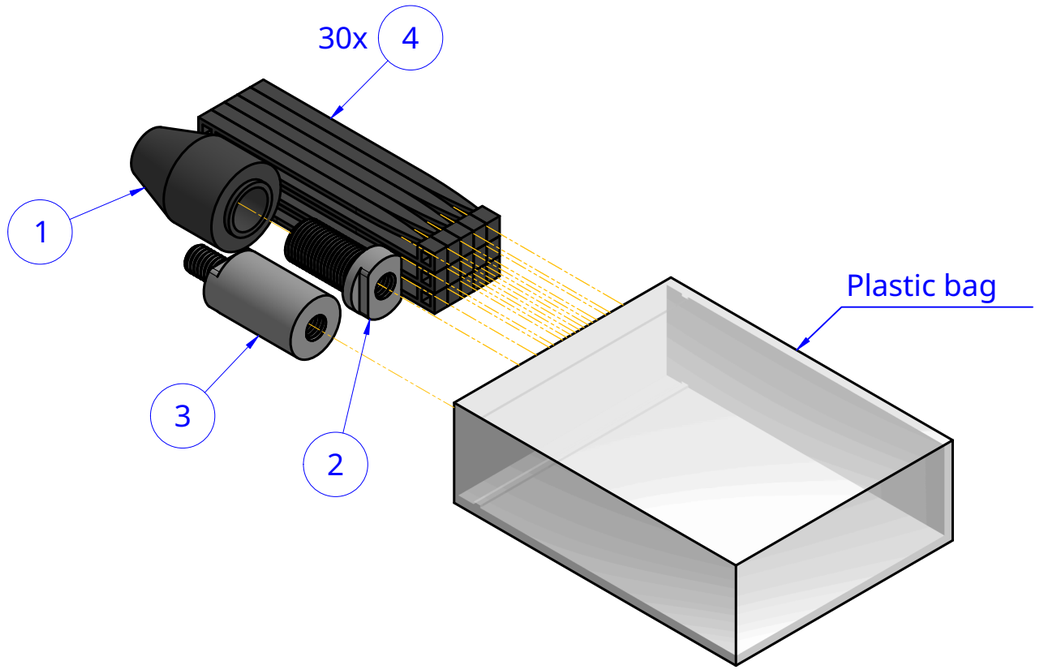

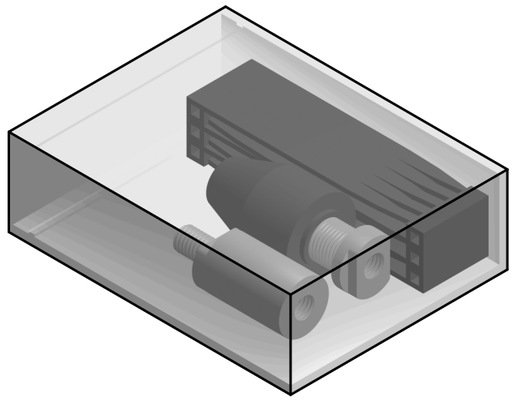

Rotary Tool Accessory Bag Rev B

NOTES:

DRAWN BY: Rory, 2021-12-17
COMPANY: FarmBot Inc
LICENSE: CC0 Public Domain Dedication

PROJECTION: First Angle
UNITS: Millimeters
SCALE: 1:1

SHEET: 4 of 5
SIZE: A3

Item	Internal Part Name	Rev	Quantity
1	Rotary Tool Box	A	1
2	Rotary Tool Accessory Bag	B	1
3	Rotary Tool Box Insert	B	1
4	Pre-Assembled Rotary Tool	B	1

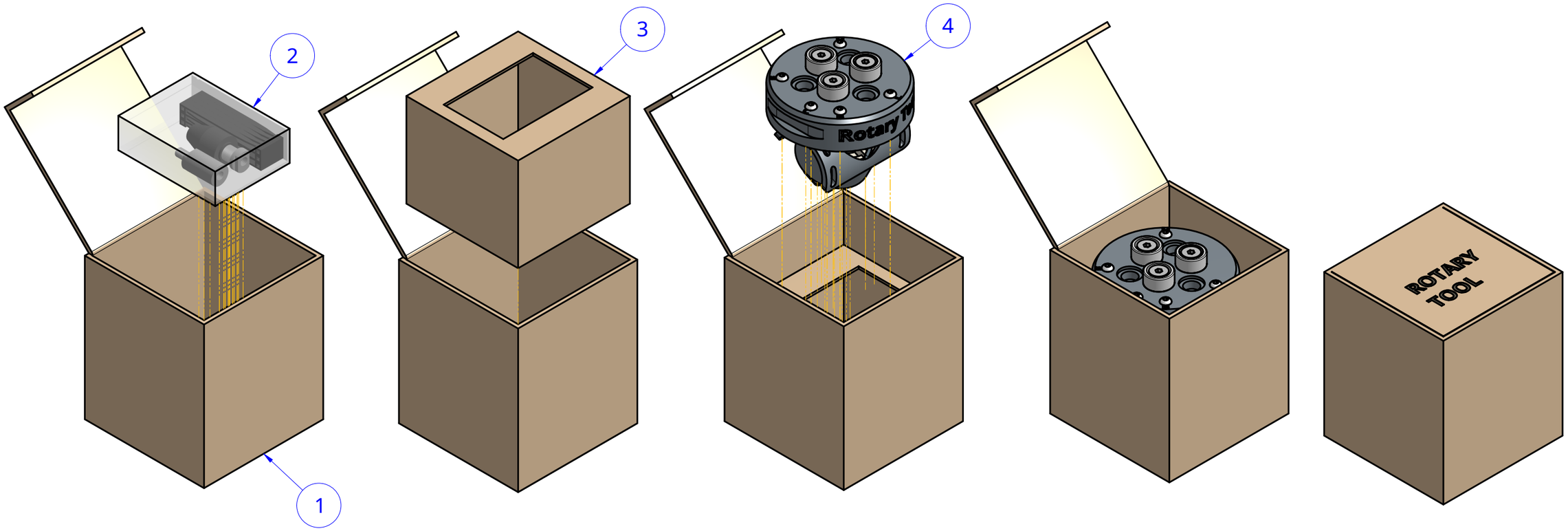

Packed Rotary Tool Rev B

NOTES:

DRAWN BY: Rory, 2021-12-17
COMPANY: FarmBot Inc
LICENSE: CC0 Public Domain Dedication

PROJECTION: First Angle
UNITS: Millimeters
SCALE: 1:2

SHEET: 5 of 5
SIZE: A3